EXPERIMENT 6: ABSOLUTE ZERO

Introduction: In this lab, you will use the relationship between temperature and volume for a gaseous substance (we will use air) to determine the temperature at which all molecular motion would cease; this temperature is called absolute zero.

IMPORTANT: Special concerns for absolute zero experiment

1. This lab uses steam; both the steam generator and the steam itself can be dangerously hot. Use caution when near the generator and when near escaping steam.
2. This lab uses a bead of mercury, which is poisonous. If for any reason the mercury gets out of the tube, inform the TA immediately.

In a container which is free to expand against the pressure of the air surrounding it, the volume of the gas in the container depends on the average speed of the atoms and/or molecules which make up that gas. When the gas is heated, the gas molecules move faster on average and, as a result, each gas molecule makes more collisions per second with the walls of its container; each collision is also, on average, more energetic. As a result, any container walls which are free to move will move outward, and thus the volume of the gas will increase. As the volume increases, the gas molecules have to travel farther and farther between repeated collisions with the moveable wall, so the collision rate (which had been increased by the rising temperature) is somewhat reduced by the increasing volume. Eventually these two effects equalize, and the contact force on the moveable wall by the gas is once again equal to the contact force on the other side of the wall by the outside air; at this point the wall stops moving outward.

In the situation described above, it can be shown that the final volume of the gas V is proportional to the average kinetic energy of the gas molecules. But it is also true that the absolute temperature T_K of the gas in Kelvins is proportional to the average kinetic energy of the gas molecules; therefore

$$V \propto T_K$$

i.e. the volume of the gas is proportional to the absolute temperature of the gas. If the average kinetic energy of the gas molecules were to become zero, then the volume of the gas would also be zero. In practice, this situation cannot occur, because the gas will always turn into a liquid (and then into a solid) before this could happen. But, by measuring the volume at various temperatures, we can create a graph of volume versus temperature; we can then extend that graph into the region where the volume would be zero to see at what temperature that zero volume would occur.

The gas we will use will be air. The container for our gas is a slender glass tube; the moveable wall of that container is created by a bead of mercury trapped within the tube. The other end of the tube is sealed with a rubber cap. The slender glass tube is located along the centerline of, and thus surrounded by, a much larger glass tube; we will heat (or cool) the slender tube by running hot (or cold) water, or steam, through the larger tube. As the slender tube is heated, the air inside will expand by pushing the bead of mercury outward. When the slender tube is cooled, the push on the bead from the outside air becomes slightly bigger than the push on the bead by the inside air and the bead will move inward until the inside and outside contact forces again equalize. Instead of measuring the volume of the column of air, we will measure only the length (since the area of the tube is constant, the volume of the air column will be proportional to its length).

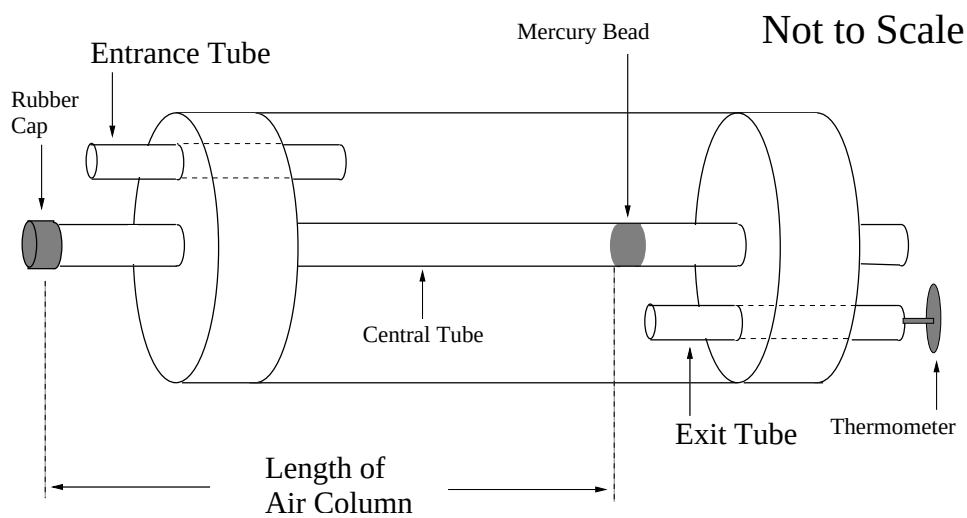

Procedure

1. Fill the steam generator about half full of water and turn on the hot-pad. Caution: the steam generator will get very hot! It takes a while for the water to boil, so to work efficiently you will want to carry out the measurements with ice water and then hot tap water while the steam generator is heating.
2. At room temperature, measure the length of the column of air trapped between the rubber stopper and the mercury bead. Be sure to identify the true end of the air column as hidden by the rubber cap. The aluminum square may help determine the bead's position along the meter stick. At room temperature, the bead should be positioned about two-thirds of the way from the rubber cap to the open end of the central tube. Alert your TA if this is not the case. Record room temperature, as indicated by the wall thermometer. and your measured length for the air column in Data Table 6.1.

3. Arrange the plumbing so that the funnel is connected to the entrance tube. Tilt the tube such that the exit end is slightly higher than the entrance end. In this configuration, when you run water through the tube, air bubbles will be able to escape. Fill the funnel with ice and pour cold water through the ice and into the large tube. Catch draining water in a plastic beaker and recycle it; use two beakers so that one is always in the catch position. Continue this procedure until the drain water is consistently the same temperature as the icewater in the funnel ($\sim 0°$ C) and the mercury bead has stopped moving. Note that keeping the thermometer permanently in the exit tube will restrict the water flow and lengthen your waiting time; insert the thermometer only as long as needed to get an accurate temperature reading. Record the final temperature and the resulting length of the air column in Data Table 6.1.

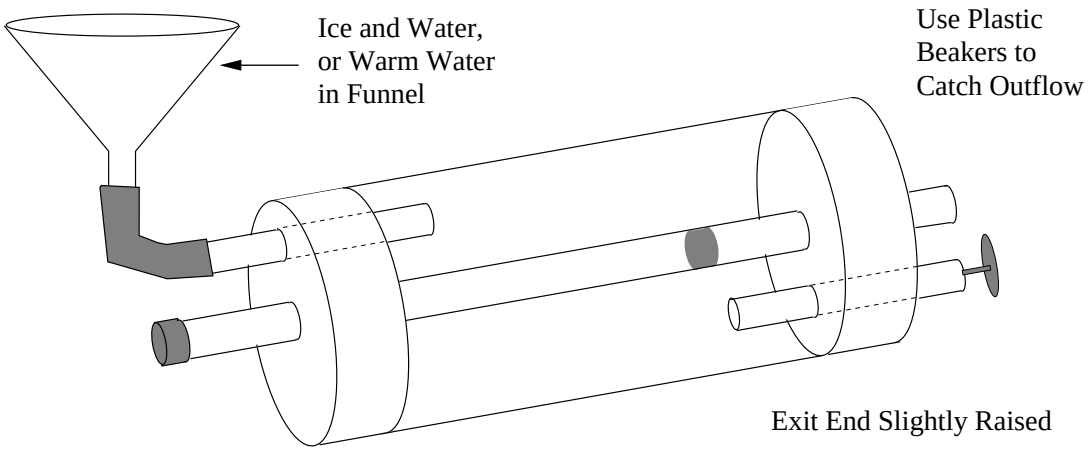

4. Repeat step three but using hot tap water instead of ice water. Record the final temperature and the resulting length of the air column in Data Table 6.1.

5. Tilt the tube so that the entrance end is now slightly higher than the exit end (see the figure on the following page). Re-arrange the plumbing to attach the steam generator to the entrance tube. CAUTION: The outer tube and the thermometer will get very hot! The downward tilt will permit the escape of any water that condenses in the tube. The thermometer may now be left in the exit tube for most of the time; carefully remove it occasionaly to allow condensed water to escape. When the temperature at

the exit is constant and the mercury bead has stopped moving, again measure the length of the air column. Record the final temperature and the length of the air column in Data Table 6.1.

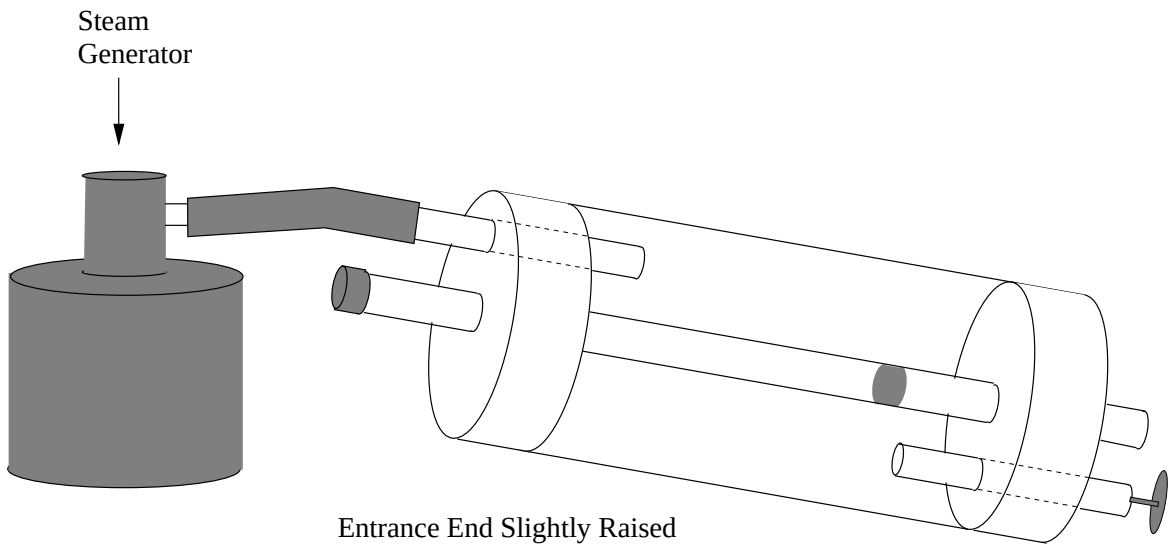

Data Table 6.1 Length of Air Column versus Temperature

	Temperature (T_C)	Length of Air Column (cm)
Room Air		
Ice Water		
Hot Water		
Steam		

Results

1. Extrapolation by hand: Make a graph with the x-axis running from -350°C to +120°C; the y-axis should run from 0.0 cm (which would correspond to zero volume and no molecular motion) to about 100 cm. Plot your data points and use a ruler to make a best-fit straight line in the region of the data points. Use your ruler to extend that line (in the region with no data, draw the line as a dotted line, not a solid line) until it crosses the x-axis. Where the dotted line crosses the x-axis is your projected, or extrapolated, Celsius temperature for absolute zero.
2. Extrapolation by calculation: Make a new graph with the x-axis running from 0°C to 100°C; the y-axis should run from a few cm below your shortest measured length to a few cm above your longest measured length. Plot your data points and draw a best-fit line using a ruler. Determine the slope of that best-fit line in units of cm/°C. Show your calculation of slope below. Determine the y-intercept of this graph in cm (you should have a data point with a temperature very close to 0°C). Since, from high-school algebra, we know that $y = mx+b$ is the equation of a straight line, and since we now have the slope m and the y-intercept b, we can calculate the value of x when y equals zero (i.e. the value of temperature when the length equals zero) from the equation

$$x = -b/m \qquad \text{(the value of } x \text{ when } y \text{ equals zero).}$$

Use this equation to calculate the extrapolated Celsius temperature at which the length will equal zero, and show your calculation below, taking care of your units.

3. Find the experimental error for extrapolation by hand. Use -273.15°C as the accepted value of absolute zero.

4. Find the experimental error for extrapolation by calculation. Use -273.15°C as the accepted value of absolute zero.

5. Were you successful in arriving at a predicted Celsius temperature at which all molecular motion would cease? Why or why not?