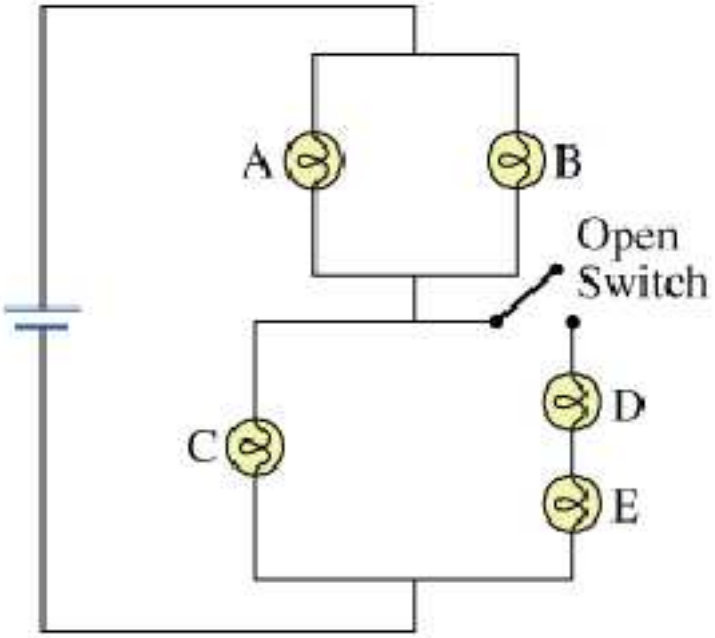
A
B
Open
Switch
C
D
E