Futuristic Concepts in Engines and Components

SAE INTERNATIONAL®

SP-1108

950090

Internal Combustion (IC) Engine with Minimum Number of Moving Parts

Gary R. Waissi
REC

ABSTRACT

This paper presents a concept for a new internal combustion (IC) engine with opposed and aligned cylinders. The proposed engine can be implemented using spark-ignited (SI) and compression ignited (CI), two and four stroke concepts. The engine design is briefly discussed and compared to conventional V-, in-line and opposed cylinder engines. The proposed IC engine has a low engine profile as well as a simple engine construction. Simplified calculations for engine balance, piston acceleration, piston speed, piston force on cylinder wall, and friction losses are shown for the proposed engine and compared to those of a conventional engine.

INTRODUCTION

In conventional reciprocating IC engines, (in-line, V, opposed) the main moving components include pistons, connecting-rods, and a crankshaft. In yoke-type engines [1] [2] [3], opposed pistons are rigidly connected to each other, and various types of slider mechanisms are used to transmit the reciprocating motion of the pistons to a rotating motion of a crankshaft. Other opposed piston engines use e.g. driveshafts, gear mechanisms, rollers and guides with various piston return means in place of the conventional connecting-rods and crankshaft [4] [5] [6] [7].

The proposed engine is an opposed piston engine, in which the piston heads are aligned and rigidly connected to each other like in yoke-type engines. However, the proposed engine differs from a yoke-type engine significantly. The yoke-type engines specifically employ a yoke to transmit the piston force to a conventional type crankshaft. The proposed engine does not have a yoke, and does not employ a conventional crankshaft, but instead the piston force is transmitted to an off-centered disk to cam a driveshaft directly, with only a bearing ring in-between the piston and the disk, which is called here a camdisk.

The second section of this paper describes the design of the proposed engine. The third section discusses the feasibility of the proposed design paying particular attention to dynamic engine balance, piston force against the cylinder wall, and piston force transmitted to the crankshaft/camdisk bearing surface in a conventional engine vs. the proposed engine. The presented computations are simplified, and are meant to serve for illustrative purpose only.

THE ENGINE

The proposed engine has at least one pair of aligned and opposed cylinders. A double-headed piston reciprocates in each cylinder pair. The piston axis is perpendicular to the axis of a driveshaft. The reciprocating motion of the piston is transmitted to the driveshaft by a rotating off-centered, rigidly to the driveshaft mounted disk, called a camdisk. The camdisk is located at the piston axis.

Figure 1 is a sketch of a section view of the proposed engine. In this figure a double-headed piston reciprocates, perpendicularly to a driveshaft, in aligned and horizontally opposed cylinders. The outer perimeter surface of the camdisk acts as a bearing and slides inside a special bearing ring. The camdisk has a diameter and annular perimeter design that fits tightly but slidably inside the bearing ring. The camdisk perimeter and surface design correspond to the conventional engine crank shaft-piston rod journal design to provide for hydrodynamic lubrication. The bearing ring, with a diameter that fits inside the piston slot, is intended to roll on the piston slot surface wall. The outer perimeter of the bearing ring may be provided with appropriate toothing, i.e. gear, to force rolling and prevent sliding if necessary. It has to be noted that for the contact point between the camdisk bearing ring and the piston to remain within the piston mantel perimeter the piston stroke cannot exceed the cylinder bore. If the stroke exceeds the bore then the contact surface between

the piston and the bearing ring has to be extended beyond the piston mantel perimeter. For clarity main engine parts are shown only.

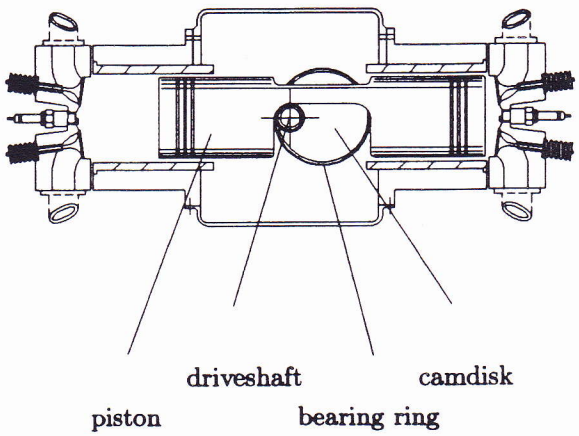

Figure 1: Section View of the Proposed Engine

FEASIBILITY OF THE PROPOSED ENGINE DESIGN

DYNAMIC ENGINE BALANCE - In [8] and [10] dynamic engine balance calculations are presented thoroughly. In summary approximate piston pin location x with respect to the crankshaft center of rotation, piston speed $\dot{x}$, piston acceleration $\ddot{x}$, and axial piston force F_{p+s} are presented with equations (1), (2), (3) and (4) respectively, as shown in [8]:

$$x \approx r[\cos\alpha + \frac{l}{r}[1 - .5(\frac{r}{l})^2(.5 - .5\cos 2\alpha)]] \quad (1)$$

$$\dot{x} \approx -r\omega[\sin\alpha + .5(\frac{r}{l})\sin 2\alpha] \quad (2)$$

$$\ddot{x} \approx -r\omega^2[\cos\alpha + (\frac{r}{l})\cos 2\alpha] \quad (3)$$

$$F_{p+s} \approx mr\omega^2\cos\alpha + m\omega^2(\frac{r^2}{l})\cos 2\alpha \quad (4)$$

where

r = crankshaft throw
ω = angular velocity, $d\alpha/dt$
l = connecting-rod length
α = crankshaft angle of rotation
$\cos\alpha$ = primary term of acceleration
$\cos 2\alpha$ = secondary term of acceleration
F_{p+s} = primary p, secondary s axial piston forces
m = reciprocating mass (piston and rod)

Here the primary term of acceleration varies with the crankshaft rotation and the secondary term of acceleration varies at twice the crankshaft rotation. Hence, the primary force $F_p = mr\omega^2\cos\alpha$ varies with the crankshaft rotation, whereas the secondary force $F_s = m\omega^2(\frac{r^2}{l})\cos 2\alpha$ varies at twice the crankshaft rotation. Complete elimination of both the primary and secondary forces, when using only the number of cylinders, their disposition and firing order, is possible only in a few cases as reported e.g. in [8], [9] and [10].

The analysis of the proposed engine utilizes the fact that no connecting-rods are present. This corresponds to a situation in which the connecting-rods can be thought to be infinitely long. The following equations (5), (6), (7) and (8) respectively for the piston to bearing ring contact point location x with respect to the driveshaft center of rotation, piston speed $\dot{x}$, piston acceleration $\ddot{x}$, and axial piston force F_d are easily found.

$$x = r\cos\alpha + R \quad (5)$$

$$\dot{x} = -r\omega\sin\alpha \quad (6)$$

$$\ddot{x} = -r\omega^2\cos\alpha \quad (7)$$

$$F_d = m_c r\omega^2\cos\alpha \quad (8)$$

where

r = camdisk throw
ω = angular velocity, $d\alpha/dt$
R = camdisk radius
α = crankshaft angle of rotation
$\cos\alpha$ = primary term
F_d = primary axial force of double headed piston
m_c = reciprocating mass (double headed piston)

The primary term of acceleration varies with the driveshaft rotation. Hence, the primary force $F_d = m_c r\omega^2\cos\alpha$ varies with the crankshaft rotation. Because secondary forces are not present, complete elimination of primary forces in multicylinder engines can be accomplished by 180° phasing.

It has to be pointed out, however, for the purpose of comparison that F_d of the proposed engine is likely to be larger than F_{p+s} of a conventional type engine, because m_c, the mass of a double headed piston, is likely be larger than m, the mass of the conventional piston and connecting-rod combination.

If we assume, for simplicity, that $F_p \approx 3F_s$ (using $l \approx 3r$), and that $m_c \approx 2m$ then

$$F_{p+s} \approx F_p + \frac{1}{3}F_p \approx 1.33F_p \quad (9)$$

and

$$F_d \approx 2mr\omega^2\cos\alpha = 2F_p \approx 1.5F_{p+s} \quad (10)$$

In other words, the primary axial piston force F_d of the proposed engine, using the above assumptions, is about 50% larger than the combined primary and secondary piston force F_{p+s} of the conventional engine. The main reason for this is the conservatively estimated doubling of the reciprocating mass.

PISTON FORCE AGAINST THE CYLINDER WALL - The piston force F_{x1} against the cylinder wall for a conventional engine can be obtained from the derivations of (1) and (4) and the underlying geometry of the setup to

$$F_{x1} = \frac{r \sin \alpha}{\sqrt{l^2 - r^2 \sin^2 \alpha} + r \cos \alpha} F_{p+s} \tag{11}$$

The maximum horizontal piston force against the cylinder wall for the conventional engine becomes then approximately $F_{x1,\max} \approx 0.25 F_{p+s} \approx 0.33 F_p$ when using $l \approx 3r$ as before.

In order to determine a comparable piston force F_{x2} against the cylinder wall for the proposed engine it is assumed, that the double headed piston is considered as two masses each of size m. Each of these masses is assumed to be concentrated at the center of each piston head. It is further assumed, that the distance from the center of the piston head to the center of rotation of the driveshaft, when both piston heads are an equidistance apart from the driveshaft, is approximated well by the length l of the connecting-rod of a conventional engine. In other words, the distance between the center points of the piston heads is approximately $2l$.

Taking moments about one piston head center point results to

$$F_{x2} 2l = F_d r \tag{12}$$

$$\Longrightarrow F_{x2} = \frac{r}{2l} F_d \tag{13}$$

substituting $F_d \approx 2F_p$ and $l \approx 3r$ as before, we obtain

$$F_{x2,\max} \approx \frac{r}{l} F_p \approx 0.33 F_p \tag{14}$$

Even as the primary axial piston force of the proposed engine is estimated above conservatively to be double of the primary axial piston force and about 1.5 times the total of the primary and secondary forces of the conventional engine, the force against the cylinder wall is approximately the same. This is due to the fact that the proposed engine has the double headed, long piston structure, and force against the cylinder wall is carried by both piston heads.

FRICTION LOSSES - In [8, Fig. 11.14, adapted from 11], an analysis of engine friction losses is summarized and discussed. There it is concluded that *piston ring friction* is about 35%, and *piston and connecting-rod friction* about another 35%, and *crankshaft friction* about 20% or less of all friction losses in a conventional engine.

Because the piston force against the cylinder wall is approximately the same for both the conventional and the proposed engine, it is assumed that the *piston ring friction* losses are about the same for both.

There is no *piston and connecting-rod friction* in the proposed engine, but instead there is *rolling resistance* between the piston slot wall and the camdisk bearing ring perimeter surface. A rolling resistance is in general caused by deformation of the rolling body and the supporting surface. In an ideal case of no deformation, there would be no rolling resistance. However, in this case some rolling resistance will be present even in the case of no deformation because of the presence of oil splash. A conservative estimate is that, the rolling resistance between the piston and the bearing ring is at most 10% of the piston and connecting-rod friction force. In any case, we expect a significantly lower corresponding resistance component.

In a conventional engine F_{p+s} is applied to the crankshaft bearing under hydrodynamic conditions. If we assume, to simplify the analysis, that the pressure caused by F_{p+s} is uniformly distributed in the oil film on one side of the journal bearing area, and that the area is approximated well by r^2, where r is the crankshaft throw, as before. The pressure $P_{F_{p+s}}$ becomes then approximately

$$P_{F_{p+s}} \approx \frac{F_{p+s}}{r^2} \approx \frac{1.33 F_p}{r^2} = 1.33 \frac{m r \omega^2 \cos \alpha}{r^2} \tag{15}$$

In the proposed engine F_d is applied to the camdisk ring under hydrodynamic conditions. Please recall, that the camdisk is slidably mounted inside a bearing ring. Oil is supplied between the bearing ring and the camdisk in a similar manner as oil is supplied to main journals and connecting-rod journals in a conventional crankshaft. It is assumed, as before, that the pressure caused by F_d is uniformly distributed in the oil film on one side of the camdisk bearing area, and the area is approximated well by $2Rr$, where R is the camdisk diameter and r is the camdisk throw. Assuming further that $R \approx 2r$ then the pressure P_{F_d} becomes to

$$P_{F_d} \approx \frac{F_d}{2Rr} \approx \frac{2F_p}{2r^3} = \frac{m r \omega^2 \cos \alpha}{r^3} \tag{16}$$

This simplified analysis suggests that the bearing pressure P_{F_d} may be significantly lower than $P_{F_{p+s}}$, because of the much larger bearing surface area in the proposed engine.

NUMBER OF MOVING PARTS - The Table 1 summarizes, as an example, a simplified, but illustrative, comparison of number of parts of a conventional 4-cylinder IC engine (in-line, V or opposed) vs. a 2-piston (4-cylinder) version of the proposed engine: (number and type of parts, components and accessories not listed are assumed to be equal). The main moving parts of a conventional 4-cylinder engine are the four pistons, the four piston connecting-rods and the one crankshaft, or a total of nine main moving parts. In the proposed engine the main moving parts include the two pistons and the combination of one driveshaft with two camdisks moving as one unit, and two special bearing rings, or a total of five main moving parts.

CONCLUSION

This paper presents a new internal combustion engine with opposed and aligned cylinders. The brief analysis of

Part	Conventional in-line 4-Cyl	Proposed 2-Piston
Piston	4	2
Connecting-Rod	4	n/a
Pin	4	n/a
Crankshaft	1	n/a
Driveshaft	n/a	1
Bearing Ring	n/a	2
Bearing	13	5
TOTAL	26	10

Table 1: Number of Moving Parts

dynamic engine balance, piston forces, friction losses and number of main parts suggests some possible advantages of the proposed design when compared to a conventional engine.

Among the advantages of the proposed design we may note the following:

The reciprocating mass generates only a primary axial force with no secondary force present, which makes it, not only possible but much easier, to completely eliminate their effect in multicylinder engines compared to conventional engines;

The piston force against the cylinder wall is about the same in both types of engines, even though the piston axial force of the proposed engine is higher than that of the conventional engine;

The friction losses of the proposed engine are expected to be significantly lower, because, first, the piston and connecting-rod friction is replaced by a significantly lower roll resistance, and secondly, the pressure caused by the axial piston force on the camdisk surface bearing under hydrodynamic conditions is significantly lower than the corresponding pressure on the connecting-rod lower end bearing under the same conditions;

Finally, the number of main moving engine parts will be significantly lower, which is likely to reduce engine manufacturing costs, as well as simplify assembly.

ACKNOWLEDGEMENT

The author is grateful to the two anonymous referees for their comments about presentation of the material in this paper. A patent has been issued for the proposed engine by the U.S. Department of Commerce, Patent and Trademark Office, application 08/106,900 dated 08/16/1993, letter Notice of Allowance dated 08/01/1994; other patents pending.

REFERENCES

1. Albertson, V., Two-Cycle Engine, U.S. Pat. No. 3,517,652, 06/1970.
2. Reitz, D., Bourke Type Engine, U.S. Pat. No. 4,013,048, 03/1977.
3. Heniges, W., Scotch Yoke Engine with Variable Stroke and Compression Ration, U.S. Pat. No. 4,485,768, 12/1984.
4. Williams, G., Cam Operated Engine, U.S. Pat. No. 4,510,894, 04/1985.
5. Konther, S., Konther-Camorro, S., Piston Engine as Combustion Engine or as a Compressor with Opposed Cylinders, U.S. Pat. No. 4,408,578, 10/1983.
6. Stiller, A., Smith, J., Oscillatory Motion Apparatus, U.S. Pat. No. 4,641,611, 02/1987.
7. Stiller, A., Smith, J., Oscillatory Motion Apparatus, U.S. Pat. No. 4,682,569, 07/1987.
8. Stone, R. *Internal Combustion Engines*, 2nd. ed., Society of Automotive Engineers, Warrendale, Pennsylvania, U.S.A., 1993.
9. Taylor, C.F., *The Internal Combustion Engine in Theory and Practice*, Vol. I, MIT Press, Cambridge, Massachusetts, U.S.A., 1985.
10. Taylor, C.F., *The Internal Combustion Engine in Theory and Practice*, Vol. II, MIT Press, Cambridge, Massachusetts, U.S.A., 1985.
11. Blackmore, D., and Thomas, A., *Fuel Economy of the Gasoline Engine*, Macmillan, London, UK, 1977.