PHY 132 LAB : Magnetic Field

Introduction

In this lab we look at the motion of a charged particle in a magnetic field. It moves in a circle whose radius R depends on the strength of field B and energy of the particle, as well as the charge/mass ratio (q/m) for the particle. We'll get practice working with multiple variables (R, KE, B) and will extract fundamental constants (q/m) for an electron. Measuring the magnetic force is not a simple task, and in fact, the required apparatus is defined and set up for you by the lab personnel. A lot of work will be required to understand the equipment and how it is to be used. Understanding the theory behind this lab is not too difficult, but putting this theory into practice and measuring the necessary quantities is a good example of how simple goals sometimes involve complicated methods .

Theory

Consider a particle of charge q and velocity v entering a region of space with a magnetic field B perpendicular to the velocity. Since the magnetic force is always perpendicular to the velocity, the particle will follow a circular path. (Remember the vector rule for Lorentz force F, field B and current I ?). The corresponding centripetal acceleration is given, according to Newton's second law, by

$$ma = \frac{mv^2}{R} = qvB, \qquad [3.l]$$

where R is the radius of the circular orbit. Rearranging terms, we obtain

$$(q/m)^2 = \frac{v^2}{R^2B^2}. \qquad [3.2]$$

Thus, we can determine the q/m ratio of the particle by measuring R, B, and its velocity. Notice that the magnetic force, being always perpendicular to the velocity, changes its direction but not its magnitude. Thus, the kinetic energy of the particle, at all times, is equal to the kinetic energy it had when it entered the magnetic field chamber. This initial kinetic energy can be manipulated by the experimentalist. Suppose that the particle, starting from rest, is accelerated by an electric field before entering the chamber. In this case, the change in kinetic energy is equal to the work done by the electric field, which is simply the charge times the electric potential difference between the beginning and the end of the accelerated path, i.e.

$$\frac{1}{2}mv^2 = qV. \qquad [3.3]$$

Substituting in Eq. 3.2, we finally obtain

$$\frac{q}{m} = \frac{2V}{B^2R^2}. \qquad [3.4]$$

where all parameters are in MKS units, namely Volts and Tesla. (Recall 1 Tesla = 10^4 Gauss). We will use this formula for the determination of the q/m ratio of the electron. Electrons will be emitted from a hot filament and accelerated by a potential V. The particles will enter a chamber filled with a gas. Collisions between electrons and the gas molecules will cause the gas to glow, so that you will be able to "see" the electron path. The chamber contains a number of crossbars at fixed distances 2R from the filament. These distances are known, so that when the electron beam hits one of the crossbars, we know the radius of the electron path and can solve Eq. 3.4 for q/m. Text Reference: Wolfson 29.3, 30.1.

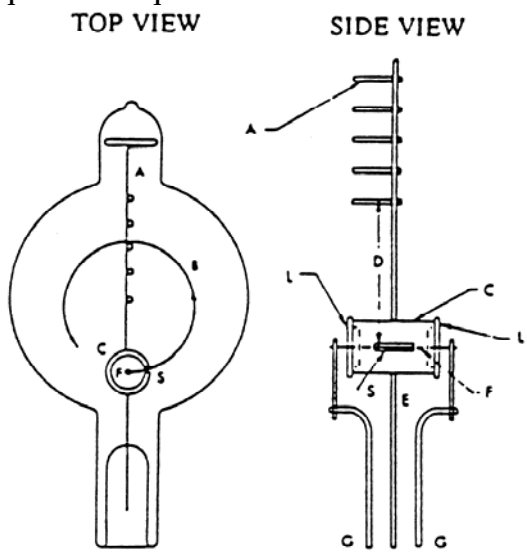

A Five cross bars attached to staff wire.
B Typical path of the electron beam.
C Cylindrical anode.
D Distance from filament to far side of each of the cross bars.
E Lead wire and support for anode.
F Filament.
G Lead wires and supports for filament.
L Insulating plugs.
S Slit in cylindrical anode.

Fig 3.1 Schematic of the gas-filled tube used for the experimental determination of the e/m ratio of the electron.

EXPERIMENTAL APPARATUS

Many students have difficulty understanding circuit wiring. The main point here is to realize that there are three different circuits. Electricity runs around closed loops like water in pipes. One circuit heats the filament to boil off electrons. A second circuit supplies current through the big outer ("Helmholtz") coils to make a magnetic field. The third circuit puts a positive voltage on the cylinder with the slit to suck out the electrons from the filament. Those electrons which hit the cylinder wall contribute to the loop whose current is measured as the electron beam current.

A detailed diagram of the tube is shown in Fig. 3.1. The magnetic field is directed normal to the page in order to give the typical beam path (B). Electrons are generated at the hot filament (F) and are subsequently accelerated towards the cylindrical anode (C). Some escape through slit (S) and "into" the tube and are deflected by the applied magnetic field. In order to measure the radius of deflection (or curvature), either the field or the accelerating voltage can be varied so that the beam hits one of the crossbars attached to the anode assembly. Some important data you need to know follows:

Crossbar Number	Distance to Filament(2R)
1	0.065 meter
2	0.078 meter
3	0.090 meter
4	0.103 meter
5	0.115 meter

Please note that these distances are to the far side of the crossbar. You do not need to know the diameter of the bar itself. There are two circuits to be used in this experiment, as shown in Figs. 3.2 and 3.3.

A) ELECTRON ACCELERATOR

This circuit generates electrons and accelerates them into the tube for subsequent deflection. The filament is a thermionic emitter: when heated electrons are driven off from its surface. These electrons form the beam as described above. Note that the anode is shown as having no connection to the filament section of the circuit; the flow of electrons across the gap completes that part of the circuit and explains why we need an ammeter in that branch.

There is an overload protection device in the filament circuit to prevent damage to the tube - the filament can burn out just like a light bulb, and if this happens, the tube is ruined. Be careful that this protection box is always in the circuit when the tube is "on".

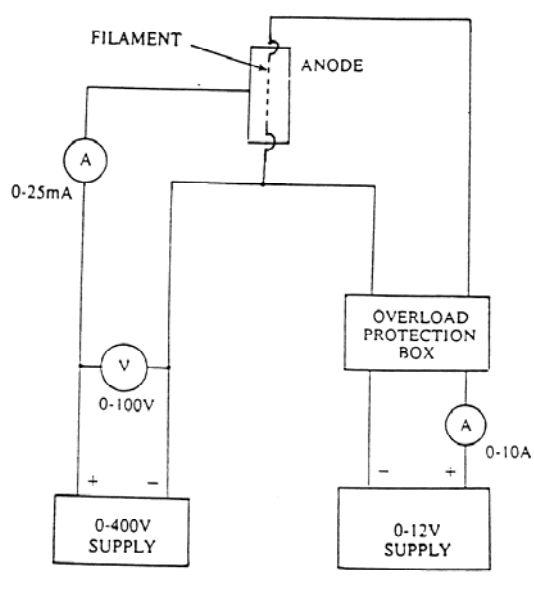

Fig. 3.2 Electron emitter and accelerator circuitry.

B) HELMHOLTZ COIL SUPPLY

This circuit is just to allow you to change the magnetic field strength by varying the current. The rheostat is a variable resistor capable of handling the high currents needed to provide the strong fields used in the experiment. The magnitude of the field (in Tesla) produced by a pair of Helmholtz coils is given by

$$B = \frac{32\,\pi 10^{-7}\,NI}{a\sqrt{125}} \qquad [3.5]$$

where N is the number of turns in each coil (N=72 for this apparatus), a the mean radius of the coils (0.33m),and I is the current in amperes through the coils.

WARNING: IN ORDER TO INSURE THE SAFETY OF THE STUDENTS AND TO PROTECT THE APPARATUS, HAVE YOUR TA CHECK THE EQUIPMENT BEFORE TURNING ANYTHING ON. IF ANY CHANGES NEED TO BE MADE DURING THE EXPERIMENT, CONTACT THE TA.

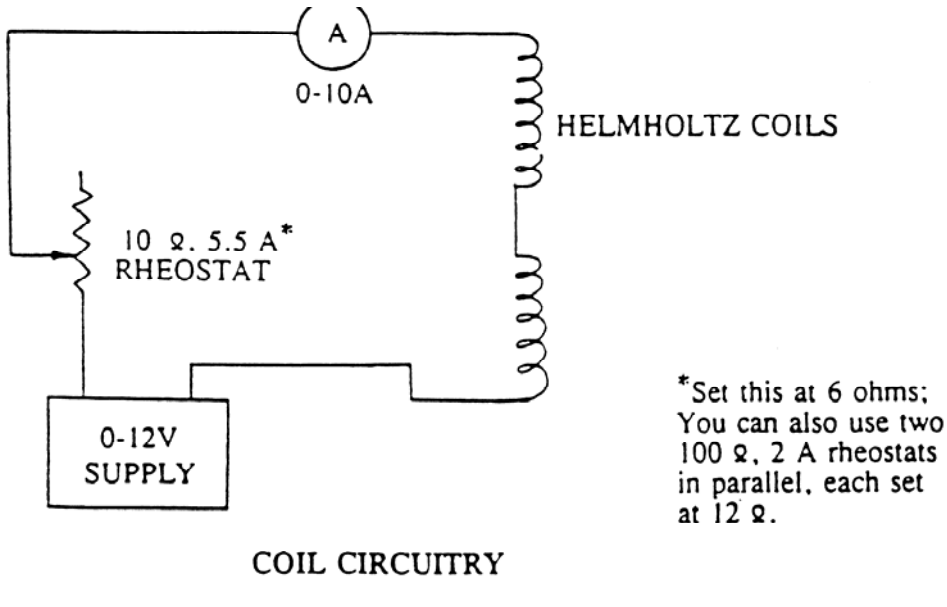

Fig3.3 Helmholz coil circuitry.

3.3 HOW TO USE THE APPARATUS

Start with all supplies turned down to zero - this is always a good idea, even if you are familiar with the equipment you are using. With no magnetic field applied, turn up the accelerating anode voltage to about 25 V. Then slowly turn up the filament supply (about 4.2 Amps) until you get emission current of about 10 mA. First, the filament will glow white hot, then a blue beam will emerge from the slit. The overload box cuts out at 4.5 A, so be sure to turn up the voltage slowly. After you get a beam, align the tube (rotate about its axis) so the beam emerges parallel to the plane of the coils. Then turn up the coil current to deflect the beam. What happens if the beam turns away from the crossbars? Don't forget that the force on the electron depends on the direction of the field as well as its magnitude!

Procedure

Our model function for this project is eq. 3.4 Note the structure: we can consider this as R(B,V) ie: the dependent variable "R" is a function of two independent variables (B,V). To explore this parameter space, we adjust one variable at a time holding the other constant. We hope to extract the constant (q/m) from a fitting of the model to the data.

1. Record data for $R(B, V_0)$. That is, measure R(B) holding V_0 at nominally 30 V. B is controlled by current in the coils, of course. As usual, take several independent readings for each data point.
2. Record data for $R(B_0, V)$. That is, measure R(V) holding B_0 fixed (nominally 3 Amps).
3. (**Optional**) Emission I-V characteristic You may have noticed that the current through the ammeter in the acceleration circuit depends quite strongly on the acceleration voltage. Plot the current as a function of the voltage and try to find a simple functional relation – perferably a linearized plot.

Analysis

1. Find (q/m) from the slope of a linearized plot of $R(B, V_0)$ data.
2. Find (q/m) from the slope of a linearized plot of $R(B_0, V)$ data.
3. Compare these two determinations. Note in particular that one has a non-zero intercept (within errors). Explain. Hint: add a constant B_{Earth} to B_{coils} in eq. 3.4.
4. The energy of electrons emitted from the filament is a few eV less on one end of the filament, due to finite resistance. Describe the effect this has on the beam shape and/or path.

Pre-Lab Quiz: PHY132 Lab

Your name_____
Section day/time_____

1) Find the magnetic field in the Helmholtz coils specified in this handout, for a current of 2.0 Amps.

2) An electron is accelerated by 100 volts then enters a 10 Gauss magnetic field at right angles to the field. Find the radius of circular path for this electron.