PHASES IN A SERIES LRC CIRCUIT

Introduction: In this lab, we will use a computer interface to analyze a series circuit consisting of an inductor (L), a resistor (R), a capacitor (C), and an AC power supply. Although the voltages across each of the circuit elements will be varying sinusoidally, we will verify that Kirchhoff's Loop Rule is valid at any instant of time. Text Reference: Wolfson 33.1-2,4.

Theoretical Notes: Writing Kirchhoff's Loop Rule for this circuit yields

$$\mathcal{E}(t) - I(t)R - Q(t)/C - L\frac{dI}{dt} = 0. \tag{1}$$

In this lab, we are going to measure $\mathcal{E}(t)$ as well as $V_R(t)$, $V_C(t)$, and $V_L(t)$, where the last three are defined so that the Loop Rule may be rewritten as

$$\mathcal{E}(t) - V_R(t) - V_C(t) - V_L(t) = 0; \tag{2}$$

in other words, $V_R(t)$, $V_C(t)$, and $V_L(t)$ are defined to be the voltage drops across the respective elements. In most texts, the EMF in equation (1) is written as $\mathcal{E}(t) = \mathcal{E}_{max} sin(\omega_D t)$, where ω_D is the driving angular frequency. The current in the circuit is then written as $I(t) = I_{max} sin(\omega_D t - \phi)$, where ϕ is the phase difference between the current and the EMF. In the lab, however, we choose to assign the "phaseless" sine function to the current; i.e.

$$I(t) = I_{max} sin(\omega_D t) \quad \text{and} \quad \mathcal{E}(t) = \mathcal{E}_{max} sin(\omega_D t + \phi). \tag{3}$$

We make this choice because the voltage drop of an ideal inductor always reaches maximum $T/4$ seconds before the current reaches maximum, and because the capacitor voltage drop always reaches maximum $T/4$ seconds after the current reaches maximum, where T is the time for one AC cycle ($T = 2\pi/\omega_D$). In other words, the phases of the inductor and capacitor voltage drops are most easily expressed with respect to the current.

Procedure: Connect the circuit shown in the figure on the next page. The inductors provided are 85 mH; use 50 Ω for R and 1.0 μF for C. The resistor r near the inductor in the figure indicates the resistance of the wires in the inductor coil. Measure r with the digital multimeter (DMM) provided with your equipment; you may ignore errors in r. Oscilloscope channel one measures $\mathcal{E}(t)$, the EMF of the signal generator (the AC power supply), and scope channel two measures $V_R(t)$, the voltage drop across the resistor, which is directly proportional to the current $I(t)$; the negatives of both channels are connected

to the common ground (the negative of the signal generator). The plus and minus signs in the figure will be significant when you eventually connect channel B of the Pasco interface.

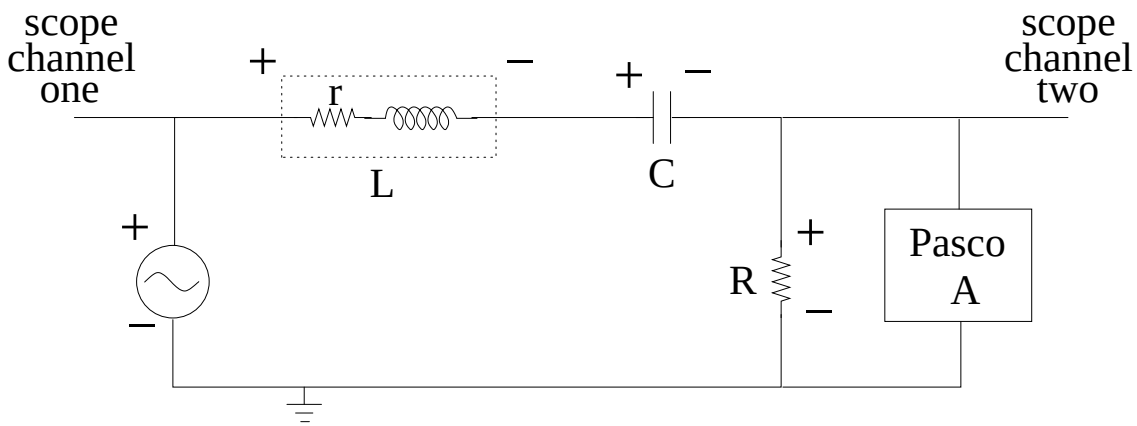

Begin with an AC EMF having a frequency of 100 Hz and an amplitude of 1.0 V. On the scope, you should observe that the current and the EMF are not in phase. As a preliminary experiment, adjust the driving frequency of the power supply, $f_D = \omega_D/(2\pi)$, until the current and the EMF are exactly in phase, or in resonance. In your discussion, include sketches and a description of the scope traces as you tune up to, and then past, the resonant frequency. Do not trust the readout of the signal generator; instead, determine your experimental resonant frequency by measuring the time for one cycle on the scope (you may ignore errors in the time) and converting this to a frequency. Compare your experimental resonant frequency with the theoretical resonant frequency of a series LRC circuit, which is gotten from $\omega_0 = 1/\sqrt{LC}$; the uncertainty in L is about 5% and the uncertainty in C is about 10%. You should observe that the amplitude of $V_R(t)$ is a maximum at the resonant frequency. In fact, if R were the total resistance in the circuit, then the amplitudes of $V_R(t)$ and $\mathcal{E}(t)$ would be equal at resonance, with the amplitude of $V_R(t)$ being smaller at all other frequencies; include an explanation of this statement in your discussion. For our circuit, the amplitude of $V_R(t)$ at resonance should be a little less than the amplitude of $\mathcal{E}(t)$; use the difference between the two amplitudes (ignore errors) to calculate the resistance in the rest of this series circuit. Does $r+R$ account for essentially all of the circuit resistance? The uncertainty in R is about 1%.

For the formal experiment, reduce the frequency until the amplitude of $V_R(t)$ is about half of the EMF amplitude. At this frequency, what is the phase difference between the current and the EMF? To answer this question, measure the time difference between a current maximum and an adjacent EMF maximum in seconds and convert this time difference to a phase difference in radians (the number of seconds per cycle can be read from the scope). According to equation (3), if the EMF reaches maximum at an earlier

(or later) time, then the phase difference is positive (or negative).

You are now ready to use the computer to record the time-dependent potential differences across each of the circuit elements. After turning on the PASCO computer interface, you will have to restart your computer; the computer can only recognize the interface during start-up. Channel A of the Pasco interface will be used as the trigger for recordings made by Pasco channel B; check that Pasco channel A displays a sine wave with zero phase shift. Now connect channel B of the Pasco interface, in turn, to each of the four circuit elements and use Data Studio (the Data Studio filename will be given on the whiteboard) to record the time-dependent potential differences. The plus and minus signs in the figure on page two indicate the correct connections for channel B of the Pasco interface; with these connections you will be recording the EMF of the signal generator and the voltage drops across the passive circuit elements. Note that the scope cannot be moved around the circuit because the scope and the signal generator have a common ground; however, the Pasco interface (like the DMM) is not grounded, and thus can be connected anywhere. As a check on your voltage measurements, use the DMM to measure the RMS voltages across each of the four circuit elements (ignore errors in these RMS voltages).

Copy the $V_R(t)$, $V_C(t)$, $V_L(t)$, and $\mathcal{E}(t)$ data to GA for analysis; you will also need to copy one time column (all the time columns should be identical). BE VERY CAREFUL to copy the entire datasets from Data Studio to GA; any mistake in copying will be disastrous for your results. Plot these four curves on a single voltage-versus-time graph. Determine the amplitude of each curve (ignore errors); compare these amplitudes with your measured RMS voltages (make the proper comparison with a percent difference). Check that Kirchhoff's Loop Rule, as expressed by equation (2), is satisfied at every instant of time by creating a calculated column which should always equal zero (the average of that column should be less than its standard deviation); include the plot of that column in your voltage-versus-time graph. You will have confirmed that $\mathcal{E}(t)$ is identical to the the time-dependent voltage drop across the LRC combination of elements (if you assume that the Loop Rule is true, this statement is obvious from the circuit diagram).

From the amplitude of $V_R(t)$, compute the current amplitude. From the current amplitude and the measured amplitude of $V_C(t)$, compute the experimentally-determined capacitor reactance, X_C; the reactance of a purely capacitive or inductive element is, by definition, the amplitude of the voltage drop across the element divided by the amplitude of the current through the element. Compare this experimental reactance with the theoretical capacitor reactance given by $X_C = 1/(\omega_D C)$, with error. From the current amplitude and the measured amplitude of $V_L(t)$, compute the experimental impedance

Z_L of the inductor (an Lr combination); the impedance of a combination of elements is, by definition, the amplitude of the voltage drop across the combination divided by the amplitude of the current through the combination. Compare this experimental impedance with the theoretical impedance given by $Z_L = \sqrt{r^2 + (\omega_D L)^2}$, with error. Also, from the current amplitude and the amplitude of $\mathcal{E}(t)$, compute the experimental impedance of the entire combination of elements; compare with the theoretical impedance as given by $Z = \sqrt{(r+R)^2 + (\omega_D L - (1/(\omega_D C)))^2}$, with error. Present your comparison of theoretical and experimental reactances and impedances neatly in a single table (with errors where appropriate).

Finally, for each of $V_C(t)$, $V_L(t)$, and $\mathcal{E}(t)$, determine from the graph the phase difference in radians with respect to the current (measure a time difference and convert to a phase difference); the sign convention for phase difference is given starting at the bottom of page two. For the purely capacitive element, the theoretical phase difference is $\frac{-\pi}{2}$, for the inductor it is $tan^{-1}(\omega_D L/r)$, and for the LRC combination it is $tan^{-1}((\omega_D L - \frac{1}{\omega_D C})/(r+R))$. Compute the theoretical phase differences, with error where appropriate (you will need $\frac{d}{dt}(tan^{-1}x) = 1/(1+x^2)$), and compare these theoretical phase differences with the corresponding experimental phase differences. Present your comparison of theoretical and experimental phase differences neatly in a single table (with errors where appropriate).

Prelab Quiz PHY132

Phases in a Series LRC Circuit

Name

Section Time and Day

Consider a series LRC circuit with $R = 200\ \Omega$, $L = 0.16$ H and $C = 0.3\ \mu$F. The current has an amplitude of 10 mA at a driving frequency of 1.0 kHz.

1. Find the amplitude of the voltage drop across each of the passive circuit elements.

2. Assuming the current is a "phaseless" sine function, as described in the lab description, find the total circuit voltage drop as a function of time, i.e. $V(t)$ across the combination LRC.

3. Find the resonant frequency of this series LRC circuit.