PHY 132 LAB : Oscilloscope

Introduction

In this lab, we consider AC signals, and use of the oscilloscope. This material is out of sequence with PHY132, but the concepts are not difficult. Text Reference: Wolfson 28: 3.

The oscilloscope (scope) is an indispensable tool for measuring electrical signals. It gives a display of voltage (vertical) vs. time (horizontal). These scales are accurately calibrated, so you can obtain numbers from the display. There are a zillion knobs, most of which we can ignore for now. You do need to understand the following:

1. Gain and position of Y and X axes. These are marked as volts/division and sec/division. 1 division is a 1cm box on the screen. A value is determined from the display as volts = (# divisions) * (volts/division). You can generally read this to 0.1 division. Take care that the CAL knobs are clicked into the calibrated position.
2. Input coupling: A/C or D/C or GND. D/C feeds the signal directly into the scope. A/C feeds only the A/C part after stripping the average (D/C) value. GND shorts the input providing an accurate zero reference, for positioning the display.
3. Focus/Intensity: adjust these to get a clear sharp line, but don't burn the screen.

Wiring tips and Digital Multimeters:

See notes from Ohm's Law Lab.

Theory:

AC signals frequently take the form of a sinewave, which we write as

$$v(t)=V_0\sin(\omega t) + V_{DC} \qquad \text{eq. 1}$$

This has amplitude V_0, and angular frequency defined as

$$\omega = 2\pi/T = 2\pi f \qquad \text{eq. 2}$$

where T is the period (sec) and "f" is the frequency, in cycles per second or Hertz (Hz). It is possible also to have a DC offset V_{DC}.

Try to sketch a sine wave from equation 1. Note that the amplitude of the wave Vo is the height of the wave peak above zero voltage when $V_{DC} = 0$. Also sketch the case where VDC is not zero - it just adds a constant voltage to all the wave, like a tide for water waves. On your sketch, indicate the period T.

RMS

The magnitude of a periodically varying voltage whose amplitude is V_0 (so that the peak-to-peak value is $V_{pp}=2V_0$) can be specified in terms of a "root-mean-square" (RMS) value. This is defined as $V_{rms} = \sqrt{\frac{\int_0^T \mathbf{v}^2(t)\,dt}{T}}$. For a sinewave, this gives $V_{rms} = V_0/\sqrt{2}$). For a triangle wave, this gives $V_{rms} = V_0/\sqrt{3}$. Your report should include a derivation of these two results. The RMS value will turn out to be useful because it is related to the amount of power in a signal. (The time-average voltage from a power outlet is actually zero, yet we can still be electrocuted !).

<u>Part 1: D/C signals</u>

1. Measure the voltage from a standard D-size battery using both the scope and the DMM as shown in the circuit of Fig. 1. If you don't have a trace on your scope, some of the zillion knobs are probably set wrong. Ask for help. Be sure the scope vertical CAL and zero are both properly set. How good are your data? Reverse the battery to get an independent second reading for each instrument, which you can use to establish "errors".

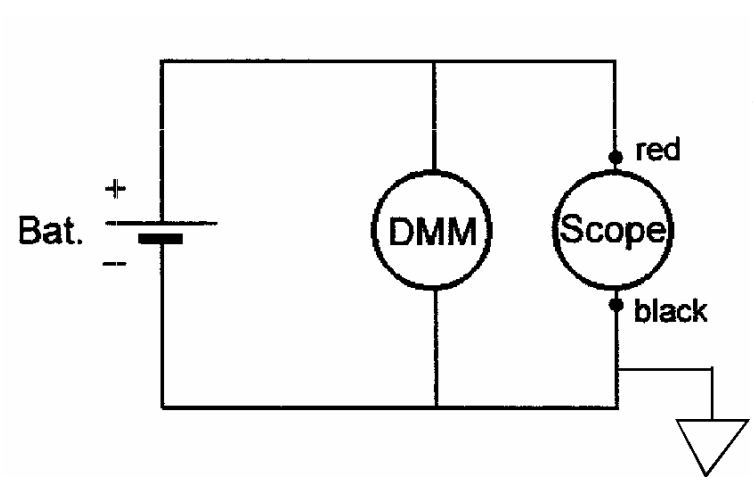

Fig. 1

2. Does unplugging either meter (DMM or scope) affect the reading of the other?
3. Slow down the sweep speed to 1sec/div and describe the effect.

Part 2: A/C signals

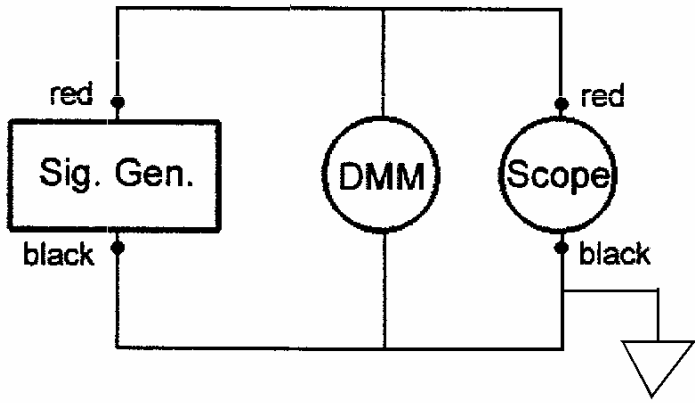

Fig. 2

1. Replace the battery with the signal generator as in the circuit of Fig. 2. Set the signal generator for a 1000Hz sinewave about $1V_{rms}$ on the DMM (AC)
2. Trigger: The display shows a recurring snapshot of an infinite wave-train. The image will stand still (retrace) provided it starts at the same point (voltage level) each time. This level is defined by the LEVEL control. Note that SLOPE must also be specified, since a sinewave crosses any level twice within its period, once rising and once falling. Adjust the trigger level and slope and explain the effect on the display.
3. DC offset: Pull out the OFFSET knob on the signal generator and watch the scope as you turn it. Be sure the scope is on DC coupling. Adjust the DC offset so the average ("center") of the sinewave is about 1.0 volts. Switch the DMM to DC, and compare its reading with the scope. Switch the scope to AC coupling and explain the result.
4. RMS: Set the sig. gen. DC offset accurately to zero, watching the DMM (DC). Change the DMM to AC, then determine the peak-to-peak voltage from your scope trace and compare with the reading from the DMM.
5. Repeat for a triangle wave.

Part 3: Voltage Divider Circuit

This is the simplest, most important and useful circuit in all of electronics. Using two channels on your oscilloscope connect the circuit shown in Fig. 3 to make the famous "voltage divider" circuit. Its behavior can be stated colloquially as "the fraction of voltage (across each element of a series resistor chain) is equal to the fraction of resistance which that element represents." We want the voltage across R2. The total resistance is Rx+R2. The fraction of resistance is therefore R2/(R2+Rx). In this case we

therefore have V2/(V2+Vx) = R2/(R2 + Rx). We'll use it to measure an unknown Rx in terms of known R2 and measured voltages. Thus we can write

$$Rx = R2 (Vl/V2 - 1) \qquad \text{eq. 3}$$

This equation provides the basis for figuring propagation of errors in your experiment.

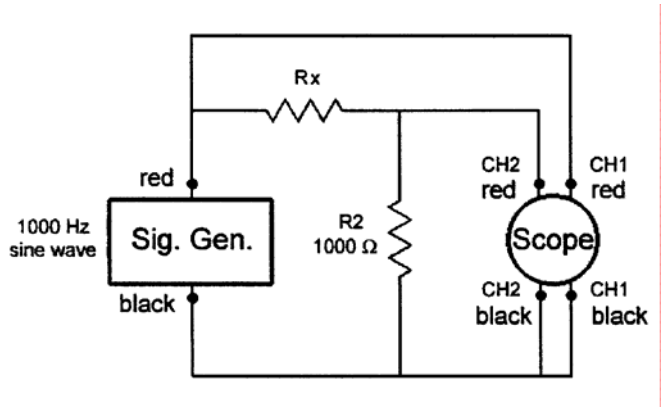

Fig. 3

1) Set an arbitrary input signal about 1V and 1000Hz. From the scope display read out the values of peak-to-peak voltages Vl (channel 1, CH1) and V2 (channel 2, CH2). Calculate the unknown resistance, knowing R2= 1000 ohms.
2) Figure the errors for Rx assuming R2 is good to 1%.
3) Measure Rx directly using the "ohms" range of the DMM (take the resistor out of the circuit) and compare with your calculated Rx. Do these agree within the errors?

Part 4: Frequency

1) Continue with the circuit shown in fig. 2. Adjust the SEC/DIV control to display one complete period of the measured waveform, making sure that the variable SEC/DIV control is in CAL detent.
2) Measure the period T of the wave, which is the time between two consecutive maxima (or alternate zero crossings). The frequency is given by f (Hz) = 1/T(sec). Compare with the signal generator setting.

Report:

Your abstract need give numbers only for the RMS and frequency measurements.

Lab Quiz: PHY132.

You must complete this assignment and turn it in at the **beginning** of your lab section.

Your name_____Section_____Time___

Consider the waveform shown below.

1) Estimate the values for DC offset, amplitude and angular frequency.
2) What would be the DMM reading on A/C? Recall that A/C strips the DC part of the input signal.